ILLUMINATOR DATA

LT2QOG040-00-X-W-24V

Lighting Dimension

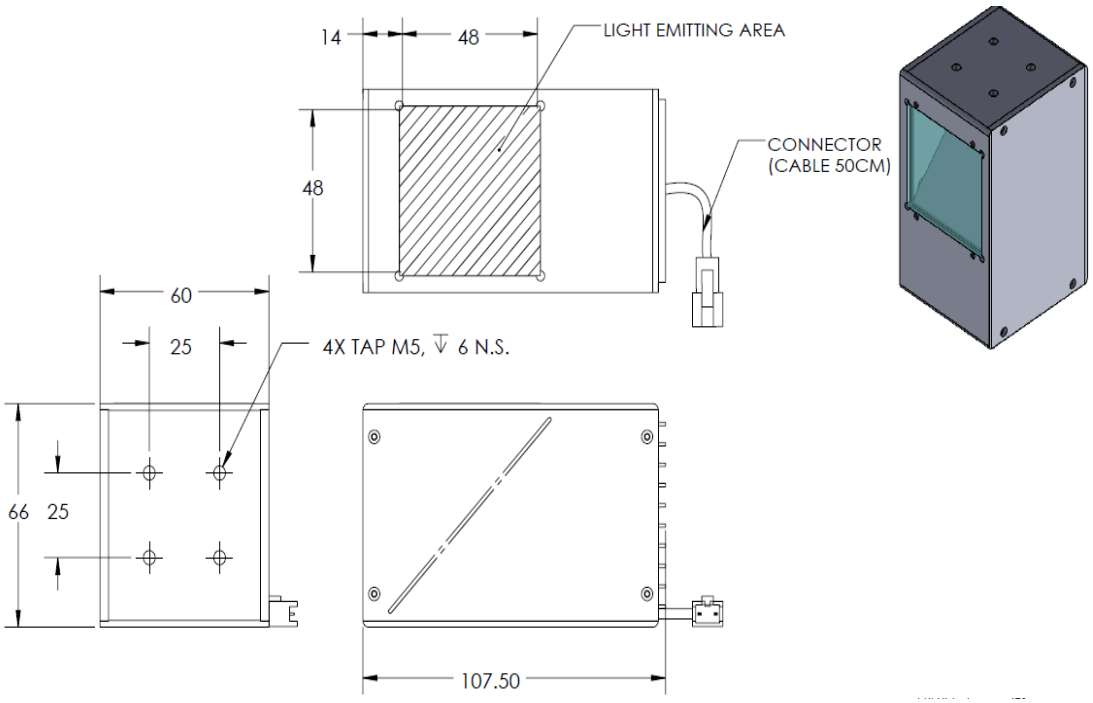

Mechanical Information	
Casing Material	Aluminium
Storage Temperature Range	0 - 45°C
Storage Humidity Range	20 - 85%
Weight	360g
Length / Outer Diameter	107.5mm
Width / Inner Diameter	60mm
Thickness / Height	66mm

ILLUMINATOR DATA

LT2QOG040-00-X-W-24V

Lighting Information			
Part Number	LT2QOG040-00-X-W-24V		
LED Color	WHITE		
Wavelength	*Refer to the Chromaticity Table below		
Working Distance	20mm	30mm	50mm
Intensity (±15%)	160000	105500	64400
Illumination (number of row)	6		
Illumination Active Area	Active Length / Outer Dia.	48mm	
	Active Width / Inner Dia.	48mm	
Emission angle	0		
Eye Safety Class (IEC62471)	EXEMPT		
Chromaticity Table For White colour only			

X	0.296	0.287	0.307	0.311
Y	0.276	0.295	0.315	0.294

X	0.311	0.307	0.33	0.33
Y	0.294	0.315	0.339	0.318

Electrical Information	
Rated Constant Voltage	24V±2%
Rated Constant Current	350mA
Power Consumption	8.4W
Casing temperature, After 60 minutes operation	TBA

Strobe Mode Specification		
*Normal Strobe Voltage	24 V	
*Normal Strobe Current	350mA	
Overdrive Voltage Range	Min: 36V	Max: 48V
Overdrive Current Range	Min: 1021mA	Max: 1659mA
Recommended Overdrive Voltage	36V	
**Max. Trigger Pulse Duration	10 msec	
**Max. Duty Cycle	10%	

*Normal strobe means the lighting is operated using the rated power. Overdrive means the power supplied to the lighting exceeded the rated power.

**Overdrive condition must not exceed the max. trigger pulse duration and max. duty cycle.

ILLUMINATOR DATA

LT2QOG040-00-X-W-24V

Connection Information			
Connector Type (Default)	JST SMR-03V		
Cable Length	50 cm		
Pin Configuration	Pin	Signal	Cable Colour
	1	LED +	Red
	2	N.C	-
	3	LED -	White
	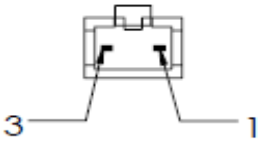		

Additional Information	
Additional Cooling Method	Attached to machine part for better heat dissipation
Intensity Controller Selection	SD, ST, ANG, LC, SDA, SDP series
CE Conformity	YES
RoHS Compliance	YES

Application	
Illumination Type	Uniform Mid Power Coaxial Illumination
Application Use	Surface Inspection and Alignment,Wafer and Metal Surface inspection,Film,LCD & Glass,Pattern on PCB Inspection.

ILLUMINATOR DATA

LT2QOG040-00-X-W-24V

Lighting Pattern				
Working Distance	20mm			
Display and Image	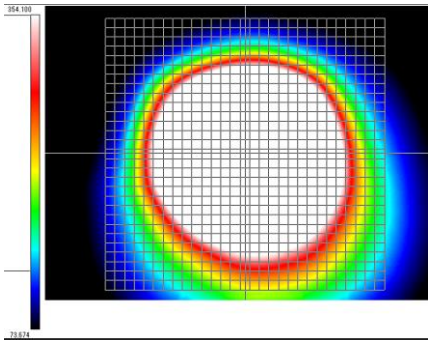			
Data Results	Horizontal	Meas.(mm)	Vertical	Meas.(mm)
	90%	203	90%	209
	80%	209	80%	219
	70%	218	70%	232
	60%	229	60%	248
	50%	243	50%	269
	40%	264	40%	277
	30%	297	30%	288
	20%	350	20%	308
	10%	396	10%	316